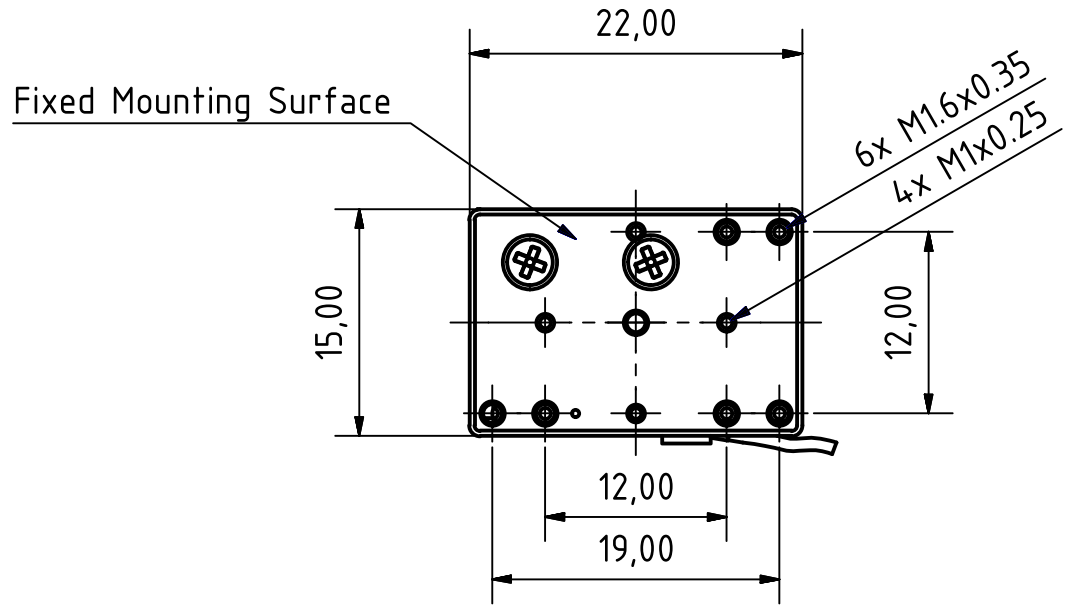
22,00
Fixed Mounting Surface
6x M1.6x0.35
4x M1x0.25
15,00
12,00
12,00
19,00

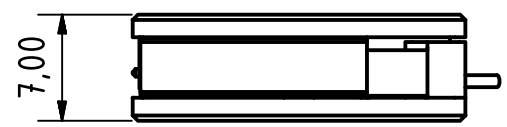
7,00

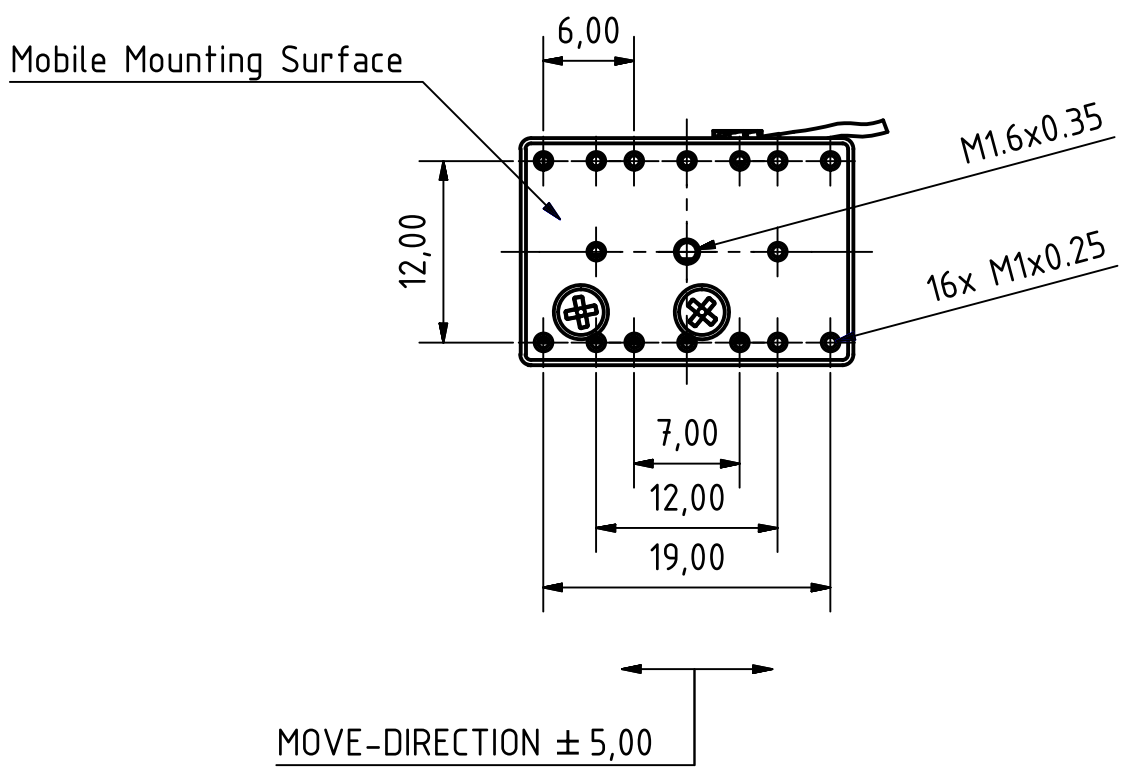
6,00
Mobile Mounting Surface
M1.6x0.35
16x M1x0.25
12,00
7,00
12,00
19,00
MOVE-DIRECTION ± 5,00

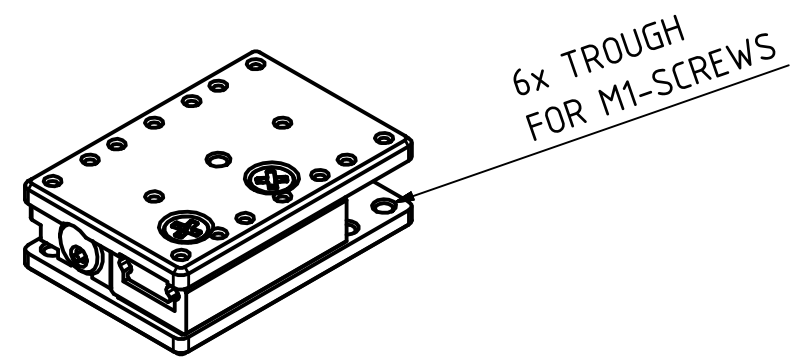
6x TROUGH
FOR M1-SCREWS